Cust. TASK FORCE TOP	Description: 8-14 X 3/8 HEX SOCKET BUTTON HEAD 302 S/S PUSHTITE II					
Cust. Part#- VT08-14PT375 Revision						
	Rev. Level A	Holbrook Item#	CAD File Name: H:\HOLBROOK\991649A.DWG	Drawn By SK	Date Drawn 02/02/10	Chkd. By JM	Date Chkd. 02/02/10
Material: 302 S/S						

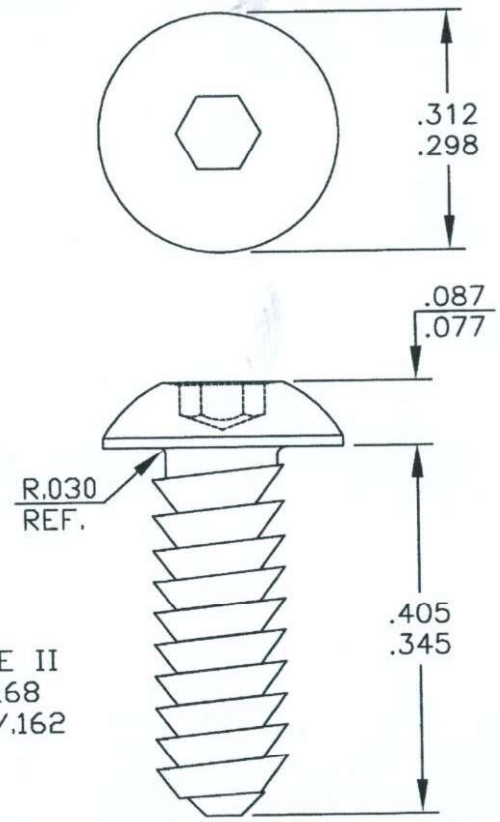

(NOT TO SCALE)

REVISIONS

Ltr.	Changes	By
A	Initial drawing release.	SK

Tolerances Unless Otherwise Specified

FRACTIONS ± 1/32 DECIMALS± .010 ANGLES ± 5°

FINISH: PASSIVATE

Engineering Dept. Approval	Project Engineer: BILL COLLOPY
DATE 02/02/10	Drawing No. Assigned: 991649A.DWG

FORM B28 REV. 1